BREL International

# TP-Series
# Precision Thin Film Chip Resistor
**Sizes: 0201/0402/0603/0805/1206/1210/2010/2512**

RoHS / ELV conform 2011/65/EC 2000/53/EC

e3

## Features:
- Excellent long-term stability
- The variance of reliability test is reduced to ±0.1%
- Low TCR down to ±5 ppm/℃
- Tight tolerance down to ±0.01 %
- Halogen free and lead free
- RoHS compliant

## Applications:
- Computer & relative products
- Communication devices
- Measuring instrument
- Converters
- Printing equipment

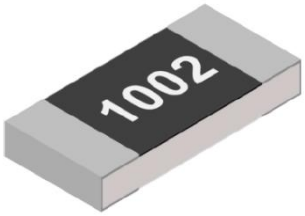


Top view

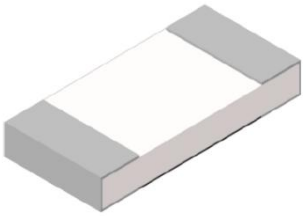

Bottom view

## Part Numbering:
**Example:**

| TP | 1206 | B | 10K0 | P | 05 | 10 | Z |
|---|---|---|---|---|---|---|---|
| **Product Type** | **Size (Inch)** | **Tolerance** | **Resistance** | **Package** | **Quantity (PCS)** | **TCR (ppm/℃)** | **Optional** |
| TP Series Precision Product Thin Film Chip Resistor | 0201<br>0402<br>0603<br>0805<br>1206<br>1210<br>2010<br>2512 | T : ±0.01%<br>A : ±0.05%<br>B : ±0.1%<br>C : ±0.25%<br>D : ±0.5%<br>F : ±1.0% | 4 digits<br>EX.<br>22R0 = 22 Ω<br>100R = 100 Ω<br>2K20 = 2.2 KΩ<br>22K0 = 22 KΩ<br>100K = 100 KΩ<br>1M00 = 1 MΩ | P : Paper Taping (0603~1210)<br>Q : Paper Taping (0201、0402)<br>E : Embossed Taping | 04 : 4000<br>05 : 5000<br>10 : 10000 | 05 : ±5<br>10 : ±10<br>15 : ±15<br>25 : ±25 | Z : Default Code |



**BREL International**
2001 Whitfield Park Ave
Sarasota, FL 34243 USA

Phone +1-941-758-7500
Fax: +1-941-758-7556
Mail: sales@brelintl.com
Web: www.brelintl.com

BREL International

# TP-Series
# Precision Thin Film Chip Resistor
## Sizes: 0201/0402/0603/0805/1206/1210/2010/2512

### Standard Electrical specifications:

| Item / Type | Rated Power at 70℃ | Max Working Voltage | Max Overload Voltage | T.C.R. (PPM/℃) | Resistance Range | | | | | |
|---|---|---|---|---|---|---|---|---|---|---|
| | | | | | T ±0.01% | A ±0.05% | B ±0.1% | C ±0.25% | D ±0.5% | F ±1.0% |
| TP0201 | 0.05W | 25V | 50V | ±10, ±15 | - | 1 KΩ ~ 14.3 KΩ | 203 Ω ~ 14.3 KΩ | | | |
| | | | | ±25 | - | 49.9 Ω ~ 56 KΩ | 10 Ω ~ 82 KΩ | | | |
| TP0402 | 0.063W | 50V | 100V | ±5 | 49.9 Ω ~ 12 KΩ | | 20 Ω ~ 12 KΩ | | | |
| | | | | ±10, ±15 | 49.9 Ω ~ 56 KΩ | | 10 Ω ~ 68 KΩ | | | |
| | | | | ±25 | | | 4.7 Ω ~ 220 KΩ | | | |
| TP0603 | 0.1W | 75V | 150V | ±5 | 49.9 Ω ~ 33 KΩ | | 20 Ω ~ 33 KΩ | | | |
| | | | | ±10, ±15 | 49.9 Ω ~ 220 KΩ | | 10 Ω ~ 332 KΩ | | | |
| | | | | ±25 | | | 4.7 Ω ~ 1 MΩ | | | |
| TP0805 | 0.125W | 150V | 300V | ±5 | 49.9 Ω ~ 68 KΩ | | 20 Ω ~ 68 KΩ | | | |
| | | | | ±10, ±15 | 49.9 Ω ~ 332 KΩ | | 10 Ω ~ 680 KΩ | | | |
| | | | | ±25 | | | 4.7 Ω ~ 1 MΩ | | | |
| TP1206 | 0.25W | 200V | 400V | ±5 | 49.9 Ω ~ 100 KΩ | | 20 Ω ~ 100 KΩ | | | |
| | | | | ±10, ±15 | 49.9 Ω ~ 499 KΩ | | 10 Ω ~ 1 MΩ | | | |
| | | | | ±25 | | | 4.7 Ω ~ 1.5 MΩ | | | |
| TP1210 | 0.25W | | | ±5 | 49.9 Ω ~ 100 KΩ | | 20 Ω ~ 100 KΩ | | | |
| | | | | ±10, ±15 | 49.9 Ω ~ 499 KΩ | | 10 Ω ~ 1 MΩ | | | |
| | | | | ±25 | | | 4.7 Ω ~ 1 MΩ | | | |
| TP2010 | 0.5W | | | ±5 | 49.9 Ω ~ 100 KΩ | | 20 Ω ~ 100 KΩ | | | |
| | | | | ±10, ±15 | 49.9 Ω ~ 499 KΩ | | 10 Ω ~ 1 MΩ | | | |
| | | | | ±25 | | | 4.7 Ω ~ 1 MΩ | | | |
| TP2512 | 0.75W | | | ±5 | 49.9 Ω ~ 100 KΩ | | 20 Ω ~ 100 KΩ | | | |
| | | | | ±10, ±15 | 49.9 Ω ~ 499 KΩ | | 10 Ω ~ 1 MΩ | | | |
| | | | | ±25 | | | 4.7 Ω ~ 1 MΩ | | | |

- Operating Temperature Range: −55℃～＋155℃.
- For non-standard parts, please contact our sales dept.



**BREL International**
2001 Whitfield Park Ave
Sarasota, FL 34243 USA

Phone: +1-941-758-7500
Fax: +1-941-758-7556
Mail: sales@brelintl.com
Web: www.brelintl.com

BREL International

# TP-Series
# Precision Thin Film Chip Resistor
**Sizes: 0201/0402/0603/0805/1206/1210/2010/2512**

## Dimensions:

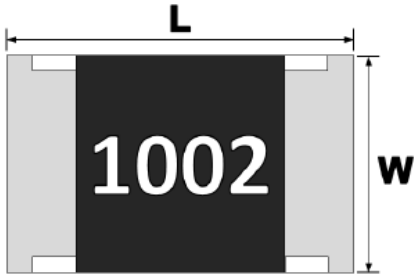


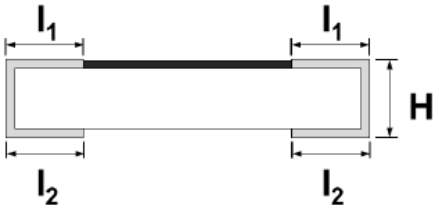


Unit: mm

| Type | L | W | H | $l_1$ | $l_2$ |
|---|---|---|---|---|---|
| TP0201 | 0.60 ± 0.05 | 0.30 ± 0.05 | 0.23 ± 0.05 | 0.12 ± 0.05 | 0.15 ± 0.05 |
| TP0402 | 1.00 ± 0.10 | 0.50 ± 0.05 | 0.30 ± 0.05 | 0.20 ± 0.10 | 0.20 ± 0.10 |
| TP0603 | 1.60 ± 0.15 | 0.80 ± 0.10 | 0.45 ± 0.10 | 0.30 ± 0.20 | 0.30 ± 0.20 |
| TP0805 | 2.00 ± 0.15 | 1.25 ± 0.15 | 0.55 ± 0.10 | 0.35 ± 0.20 | 0.40 ± 0.20 |
| TP1206 | 3.10 ± 0.15 | 1.60 ± 0.15 | 0.55 ± 0.10 | 0.45 ± 0.20 | 0.50 ± 0.20 |
| TP1210 | 3.10 ± 0.15 | 2.50 ± 0.15 | 0.55 ± 0.10 | 0.45 ± 0.20 | 0.50 ± 0.20 |
| TP2010 | 5.00 ± 0.15 | 2.50 ± 0.15 | 0.55 ± 0.10 | 0.60 ± 0.20 | 0.60 ± 0.20 |
| TP2512 | 6.30 ± 0.15 | 3.20 ± 0.15 | 0.55 ± 0.10 | 0.60 ± 0.20 | 0.60 ± 0.20 |

## Construction:

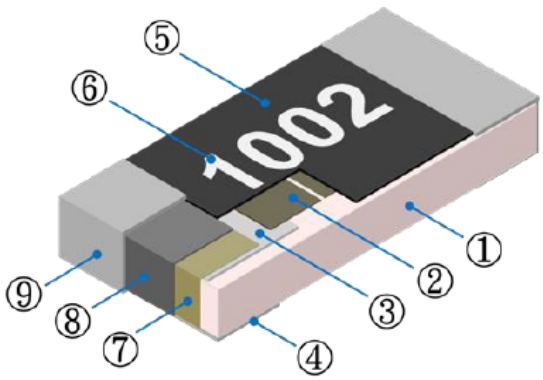


| | | | | | |
|---|---|---|---|---|---|
| ① | Alumina Substrate | ④ | Bottom Inner Electrode | ⑦ | Side Inner Electrode |
| ② | Resistive Layer | ⑤ | Protective Overcoat | ⑧ | Nickel Barrier |
| ③ | Top Inner Electrode | ⑥ | Marking | ⑨ | Solder coating (Sn) |



**BREL International**
2001 Whitfield Park Ave
Sarasota, FL 34243 USA

Phone: +1-941-758-7500
Fax: +1-941-758-7556
Mail: sales@brelintl.com
Web: www.brelintl.com

BREL International

# TP-Series
# Precision Thin Film Chip Resistor
**Sizes: 0201/0402/0603/0805/1206/1210/2010/2512**

## Performance Characteristics:

**● Power Derating Curve**

The Operating Temperature Range: 55°C ~+155°C.

Power rating is in the case based on continuous full load at ambient temperature of 70℃. For operation at ambient temperature in excess of 70℃, the load should be derated in accordance with figure of derating Curve.

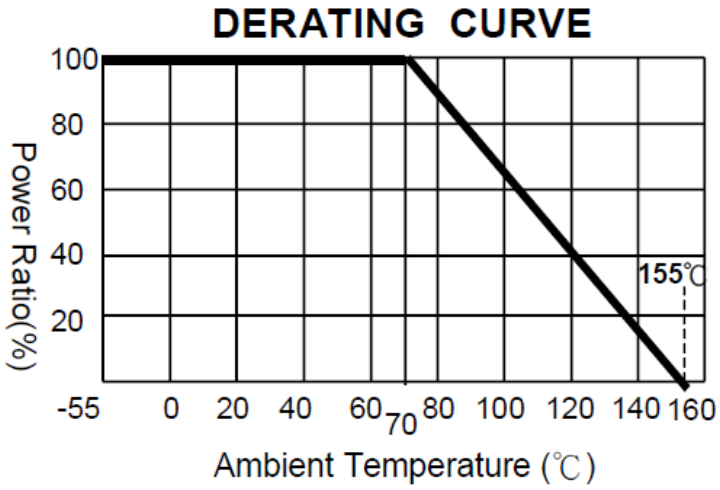


**● Rated Voltage**

Resistance Range: ≧1Ω

Rated Voltage: The resistor should have a DC continuous working voltage or a RMS AC continuous working voltage at commercial line frequency and wave form corresponding to the power rating, as determined formula as following:

$$V = \sqrt{P \times R}$$

V = Rated voltage (V)
P = Rated power (W)
R = Nominal resistance (Ω)



**BREL International**
2001 Whitfield Park Ave
Sarasota, FL 34243 USA

Phone: +1-941-758-7500
Fax: +1-941-758-7556
Mail: sales@brelintl.com
Web: www.brelintl.com

BREL International

# TP-Series
# Precision Thin Film Chip Resistor
## Sizes: 0201/0402/0603/0805/1206/1210/2010/2512

## Reliability Tests and Requirements:

| Test Item | Test Method | Procedure | Requirements | |
|---|---|---|---|---|
| | | | 0402 ~ 2512 | 0201 |
| Temperature Coefficient of Resistance (T.C.R) | JIS-C-5201-1 4.8<br>IEC-60115-1 4.8 | At 25 / -55℃ and 25℃ /+125℃, 25℃ is the reference temperature | Refer to Standard Electrical Specifications | |
| Short Time Overload | JIS-C-5201-1 4.13<br>IEC-60115-1 4.13 | 2.5 times RCWV or Max. Overload voltage whichever is less for 5 seconds. | ±(0.1%+0.05Ω) | ±(0.3%+0.05Ω) |
| | | | No Visual damage | |
| Insulation Resistance | JIS-C-5201-1 4.6<br>IEC-60115-1 4.6 | Apply 100VDC for 1 minute. | ≧10GΩ | |
| Solderability | JIS-C-5201-1 4.17<br>IEC-60115-1 4.17 | 245±5℃ for 3 seconds. | >95% Coverage<br>No Visual damage | |
| Resistance to Soldering Heat | JIS-C-5201-1 4.18<br>IEC-60115-1 4.18 | 260±5℃ for 10 seconds. | ±(0.1%+0.05Ω) | ±(0.3%+0.05Ω) |
| | | | No Visual damage | |
| Leaching | JIS-C-5201-1 4.18<br>IEC-60068-2-58 8.2.1 | 260±5℃ for 30 seconds. | >95% Coverage<br>No Visual damage | |
| Rapid Change of Temperature | JIS-C-5201-1 4.19<br>IEC-60115-1 4.19 | -55℃ to +155℃, 300 cycles | ±(0.2%+0.05Ω) | ±(0.3%+0.05Ω) |
| | | | No Visual damage | |
| High Temperature Exposure | JIS-C5201-1 4.25<br>IEC 60068-2-2 | At 155±5℃ for 1000 hours. | ±(0.2%+0.05Ω) | ±(0.3%+0.05Ω) |
| Resistance to Solvent | JIS-C-5201-1 4.29 | The tested resistor be immersed into isopropyl alcohol of 20~25℃ for 60 secs.<br>Then the resistor is left in the room for 48 hrs. | ±(0.1%+0.05Ω) | ±(0.3%+0.05Ω) |
| | | | No Visual damage | |
| Damp Heat with Load | JIS-C-5201-1 4.24<br>IEC-60115-1 4.24 | 40±2℃, 90~95% R.H. RCWV or Max. working voltage whichever is less for 1000 hrs with 1.5 hrs "ON" and 0.5 hr "OFF" | ±(0.1%+0.05Ω) | ±(0.3%+0.05Ω) |
| Humidity Bias | MIL-STD-202 Method 103 | 1,000 hours; 85°C / 85% RH, 10% of operating power. Measurement at 24±4 hours after test conclusion. | ±(0.1%+0.05Ω) | ±(0.3%+0.05Ω) |
| Load Life (Endurance) | JIS-C-5201-1 4.25<br>IEC-60115-1 4.25.1 | 70±2℃, RCWV or Max. working voltage whichever is less for 1000 hrs with 1.5 hrs "ON" and 0.5 hr "OFF". | ±(0.1%+0.05Ω) | ±(0.3%+0.05Ω) |
| Bending Strength | JIS-C-5201-1 4.33<br>IEC-60115-1 4.33 | Bending once for 5 seconds<br>D： 0201、0402、0603、0805 = 5mm<br>1206、1210 = 3mm<br>2010、2512 = 2mm | ±(0.1%+0.05Ω) | ±(0.3%+0.05Ω) |
| | | | No Visual damage | |

● We can also provide AEC-Q200 test reports if required by customers.



**BREL International**
2001 Whitfield Park Ave
Sarasota, FL 34243 USA

Phone: +1-941-758-7500
Fax: +1-941-758-7556
Mail: sales@brelintl.com
Web: www.brelintl.com

BREL International

# TP-Series
# Precision Thin Film Chip Resistor
## Sizes: 0201/0402/0603/0805/1206/1210/2010/2512

## Recommended Customer Soldering Parameters:

● **Wave solder Temperature Condition**

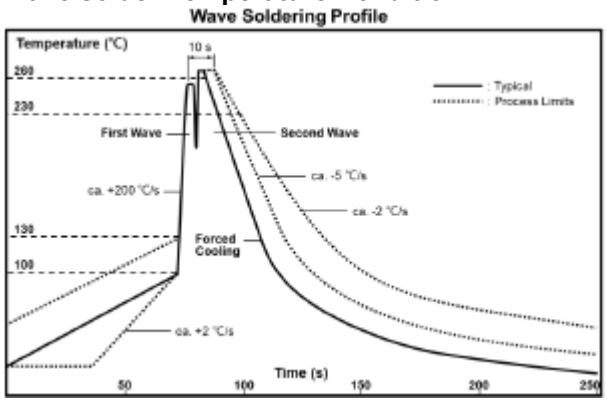


● **Solder reflow Temperature condition**

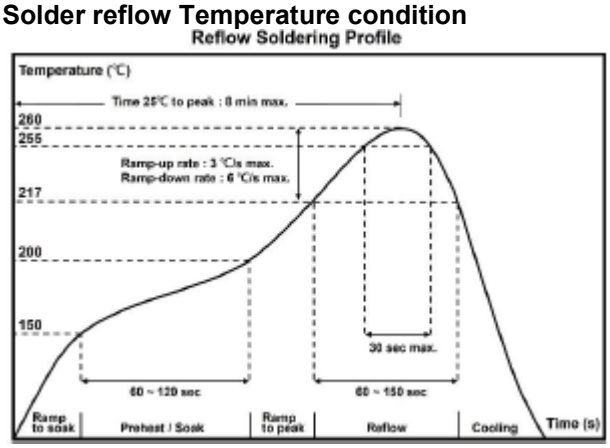


● **Rework temperature (hot air equipment)： 350℃, 3~5seconds**

● **Recommended reflow methods**

IR, vapor phase oven, hot air oven

If reflow temperatures exceed the recommended profile, devices may not meet the performance requirements.

## Recommend Land Pattern Design:

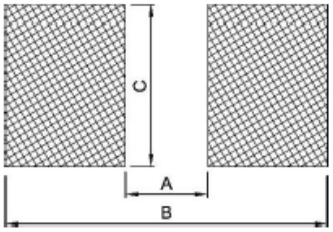


Unit: mm

| Item \ Type | 0201 | 0402 | 0603 | 0805 | 1206 | 1210 | 2010 | 2512 |
|---|---|---|---|---|---|---|---|---|
| A | 0.25 | 0.50 | 0.80 | 1.30 | 2.20 | 2.00 | 3.80 | 4.90 |
| B | 0.85 | 1.60 | 2.40 | 2.90 | 4.20 | 4.40 | 6.60 | 8.10 |
| C | 0.35 | 0.70 | 1.00 | 1.40 | 1.70 | 2.70 | 2.70 | 3.40 |



**BREL International**
2001 Whitfield Park Ave
Sarasota, FL 34243 USA

Phone: +1-941-758-7500
Fax: +1-941-758-7556
Mail: sales@brelintl.com
Web: www.brelintl.com

BREL International

# TP-Series
# Precision Thin Film Chip Resistor
## Sizes: 0201/0402/0603/0805/1206/1210/2010/2512

## Packaging :

- **Reel Dimensions**

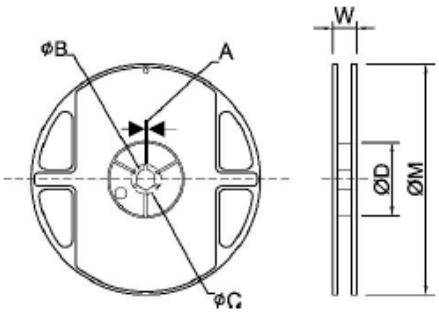


Unit: mm

| Type | Size | | A | ΦB | ΦC | ΦD | W | ΦM |
|---|---|---|---|---|---|---|---|---|
| 0201/0402 | 7" | 10K/Reel | 2.0±0.5 | 13.5±1.0 | 21±1.0 | 60±1.0 | 11.5±2.0 | 178±2.0 |
| 0603/0805/1206/1210 | 7" | 5K/Reel | 2.0±0.5 | 13.5±1.0 | 21±1.0 | 60±1.0 | 11.5±2.0 | 178±2.0 |
| 2010/2512 | 7" | 4K/Reel | 2.0±0.5 | 13.5±1.0 | 21±1.0 | 60±1.0 | 16.0±2.0 | 178±2.0 |

- **Paper Tape Dimensions**

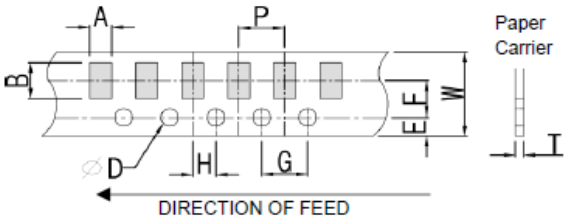


Unit : mm

| Type | A | B | W | E | F | G | H | T | ΦD | P |
|---|---|---|---|---|---|---|---|---|---|---|
| 0201 | 0.40±0.05 | 0.70±0.05 | 8.0±0.20 | 1.75±0.10 | 3.5±0.05 | 4.0±0.10 | 2.0±0.05 | 0.45±0.10 | $1.50^{+0.10}_{-0}$ | 2.0±0.10 |
| 0402 | 0.70±0.10 | 1.20±0.10 | 8.0±0.20 | 1.75±0.10 | 3.5±0.05 | 4.0±0.10 | 2.0±0.05 | 0.45±0.10 | | |
| 0603 | 1.05±0.20 | 1.80±0.20 | 8.0±0.20 | 1.75±0.10 | 3.5±0.05 | 4.0±0.10 | 2.0±0.05 | 0.60±0.10 | | 4.0±0.10 |
| 0805 | 1.55±0.20 | 2.30±0.20 | 8.0±0.20 | 1.75±0.10 | 3.5±0.05 | 4.0±0.10 | 2.0±0.05 | 0.75±0.10 | | |
| 1206 | 1.90±0.20 | 3.50±0.20 | 8.0±0.20 | 1.75±0.10 | 3.5±0.05 | 4.0±0.10 | 2.0±0.05 | 0.75±0.10 | | |
| 1210 | 2.85±0.20 | 3.50±0.20 | 8.0±0.20 | 1.75±0.10 | 3.5±0.05 | 4.0±0.10 | 2.0±0.05 | 0.75±0.10 | | |

- **Plastic Embossed Tape Dimensions**

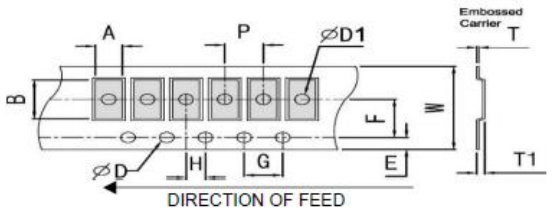


Unit : mm

| Type | A | B | W | E | F | G | H | T | ΦD | ΦD1 | T1 | P |
|---|---|---|---|---|---|---|---|---|---|---|---|---|
| 2010 | 2.80±0.20 | 5.60±0.20 | 12±0.10 | 1.75±0.10 | 5.5±0.05 | 4.0±0.10 | 2.0±0.05 | 0.23±0.10 | $1.50^{+0.10}_{-0}$ | 1.50±0.10 | 0.85±0.15 | 4.0±0.10 |
| 2512 | 3.40±0.20 | 6.70±0.20 | 12±0.10 | 1.75±0.10 | 5.5±0.05 | 4.0±0.10 | 2.0±0.05 | 0.23±0.10 | | 1.50±0.10 | 0.85±0.15 | |

Specifications subject to change without notice

Issue 08-2026

**BREL International**
2001 Whitfield Park Ave
Sarasota, FL 34243 USA

Phone: +1-941-758-7500
Fax: +1-941-758-7556
Mail: sales@brelintl.com
Web: www.brelintl.com

BREL International

# TP-Series
# Precision Thin Film Chip Resistor
## Sizes: 0201/0402/0603/0805/1206/1210/2010/2512

- **Front & Back Lead Dimensions**

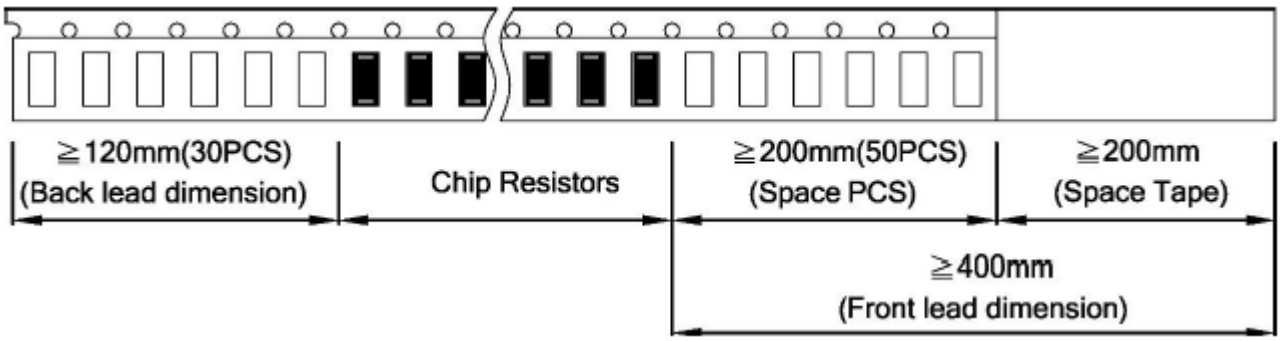


- **Top Adhesive Peel Off Strength：10~70g**

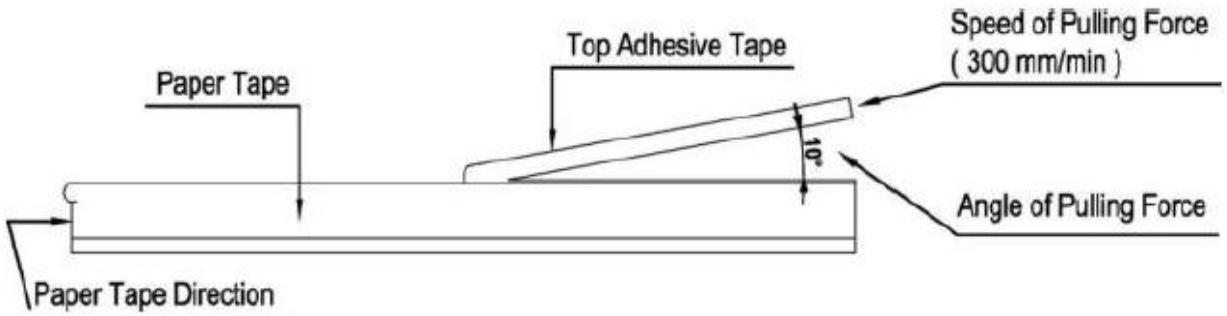


## Package:

| Inner Box Size | |
|---|---|
| Reel | Size H(mm) |
| 1 | 13 |
| 2 | 24 |
| 3 | 36 |
| 5 | 60 |
| 10 | 113 |

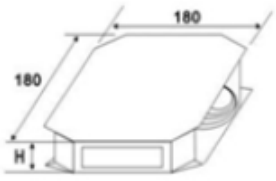


| External Box Size | | | |
|---|---|---|---|
| Contain (Kpcs) | Length (mm) | Width (mm) | Height (mm) |
| 25K | 180 | 180 | 60 |
| 50K | 180 | 180 | 110 |
| 150K | 430 | 200 | 200 |
| 300K | 400 | 400 | 200 |

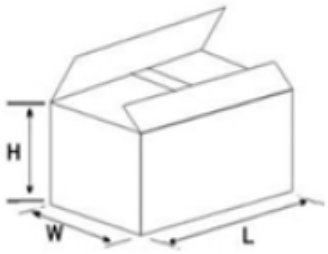


## Storage Data:
Storage time at the environment temp: 25±5℃ & humidity: 60±20% is valid for two years.



**BREL International**
2001 Whitfield Park Ave
Sarasota, FL 34243 USA

Phone: +1-941-758-7500
Fax: +1-941-758-7556
Mail: sales@brelintl.com
Web: www.brelintl.com