BREL International

TR-Series
Thin Film Chip Resistor

Sizes: 0201/0402/0603/0805/1206/1210/2010/2512

RoHS / ELV conform 2011/65/EC 2000/53/EC

e3

Features:

- Tolerance to ±0.1 %
- Low TCR to ±10 ppm/℃
- Downsize to 0201
- Halogen free and lead free
- RoHS compliant

Applications:

- Computer & relative products
- Communication devices
- Measuring instrument
- Converters
- Printing equipment

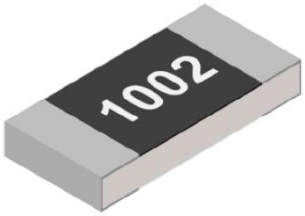

Top view

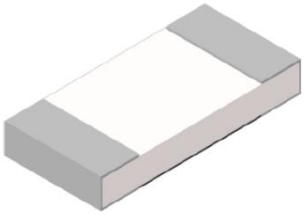

Bottom view

Part Numbering:

Example:

TR	1206	B	10K0	P	05	25	Z
Product Type	**Size (Inch)**	**Tolerance**	**Resistance**	**Package**	**Quantity (PCS)**	**TCR (ppm/℃)**	**Optional**
TR Series General Purpose Thin Film Chip Resistor	0201 0402 0603 0805 1206 1210 2010 2512	B : ±0.1% C : ±0.25% D : ±0.5% F : ±1%	4 digits EX. 1R00 = 1 Ω 10R0 = 10 Ω 100R = 100 Ω 2K20 = 2.2 KΩ 332K = 332 KΩ 1M00 = 1 MΩ	P : Paper Taping (0603~1210) Q : Paper Taping (0201、0402) E : Embossed Taping B : Bulk	04 : 4000 05 : 5000 10 : 10000 20 : 20000 40 : 40000 50 : 50000	10 : ±10 15 : ±15 25 : ±25 50 : ±50	Z : Default Code

BREL International
2001 Whitfield Park Ave
Sarasota, FL 34243 USA

Phone: +1-941-758-7500
Fax: +1-941-758-7556
Mail: sales@brelintl.com
Web: www.brelintl.com

BREL International

TR-Series
Thin Film Chip Resistor
Sizes: 0201/0402/0603/0805/1206/1210/2010/2512

Standard Electrical specifications:

項目 Item / 型別 Type	額定功率 Rated Power at 70℃	最大工作電壓 Max Working Voltage	最大過負載電壓 Max Overload Voltage	溫度係數 T.C.R. (PPM/℃)	阻值範圍 Resistance Range			
					B ±0.1%	C ±0.25%	D ±0.5%	F ±1%
TR0201	0.05W	25V	50V	±10	10 Ω ~ 5.1 KΩ			
				±15				
				±25	10 Ω ~ 82 KΩ			
				±50				
TR0402	0.063W	50V	100V	±10	10 Ω ~ 68 KΩ			
				±15				
				±25	4.7 Ω ~ 220 KΩ		2.49 Ω ~ 220 KΩ	
				±50				
TR0603	0.1W	75V	150V	±10	10 Ω ~ 332 KΩ			
				±15				
				±25	4.7 Ω ~ 680 KΩ		2.49 Ω ~ 680 KΩ	
				±50				
TR0805	0.125W	150V	300V	±10	10 Ω ~ 680 KΩ			
				±15				
				±25	4.7 Ω ~ 1 MΩ		2.49 Ω ~ 1 MΩ	
				±50				
TR1206	0.25W	200V	400V	±10	10 Ω ~ 1 MΩ			
				±15				
				±25	4.7 Ω ~ 1.5 MΩ		2.49 Ω ~ 1.5 MΩ	
				±50				
TR1210	0.25W			±10	10 Ω ~ 1 MΩ			
				±15				
				±25	4.7 Ω ~ 1 MΩ		2.49 Ω ~ 1 MΩ	
				±50				
TR2010	0.5W			±10	10 Ω ~ 1 MΩ			
				±15				
				±25	4.7 Ω ~ 1 MΩ		2.49 Ω ~ 1 MΩ	
				±50				
TR2512	0.75W			±10	10 Ω ~ 1 MΩ			
				±15				
				±25	4.7 Ω ~ 1 MΩ		2.49 Ω ~ 1 MΩ	
				±50				

- For non-standard parts, please contact our sales dept.
- Operating Temperature Range ：−55℃～＋155℃.

BREL International
2001 Whitfield Park Ave
Sarasota, FL 34243 USA

Phone: +1-941-758-7500
Fax: +1-941-758-7556
Mail: sales@brelintl.com
Web: www.brelintl.com

BREL International

TR-Series
Thin Film Chip Resistor

Sizes: 0201/0402/0603/0805/1206/1210/2010/2512

Dimensions:

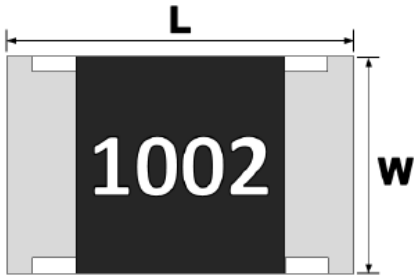

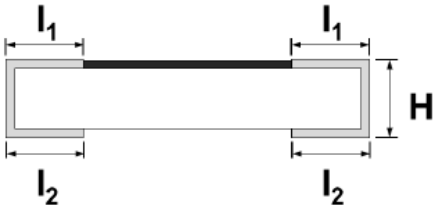

Unit: mm

TYPE	L	W	H	l_1	l_2
TR0201	0.60 ± 0.05	0.30 ± 0.05	0.23 ± 0.05	0.12 ± 0.05	0.15 ± 0.05
TR0402	1.00 ± 0.10	0.50 ± 0.05	0.30 ± 0.05	0.20 ± 0.10	0.20 ± 0.10
TR0603	1.60 ± 0.15	0.80 ± 0.10	0.45 ± 0.10	0.30 ± 0.20	0.30 ± 0.20
TR0805	2.00 ± 0.15	1.25 ± 0.15	0.55 ± 0.10	0.35 ± 0.20	0.40 ± 0.20
TR1206	3.10 ± 0.15	1.60 ± 0.15	0.55 ± 0.10	0.45 ± 0.20	0.50 ± 0.20
TR1210	3.10 ± 0.15	2.50 ± 0.15	0.55 ± 0.10	0.45 ± 0.20	0.50 ± 0.20
TR2010	5.00 ± 0.15	2.50 ± 0.15	0.55 ± 0.10	0.60 ± 0.20	0.60 ± 0.20
TR2512	6.30 ± 0.15	3.20 ± 0.15	0.55 ± 0.10	0.60 ± 0.20	0.60 ± 0.20

Construction:

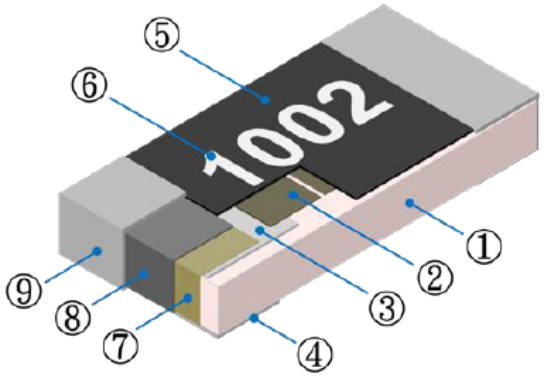

①	Alumina Substrate	④	Bottom Inner Electrode	⑦	Side Inner Electrode
②	Resistive Layer	⑤	Protective Overcoat	⑧	Nickel Barrier
③	Top Inner Electrode	⑥	Marking	⑨	Solder coating (Sn)

Specifications subject to change without notice

Issue 12-2024

BREL International
2001 Whitfield Park Ave
Sarasota, FL 34243 USA

Phone: +1-941-758-7500
Fax: +1-941-758-7556
Mail: sales@brelintl.com
Web: www.brelintl.com

BREL International

TR-Series
Thin Film Chip Resistor

Sizes: 0201/0402/0603/0805/1206/1210/2010/2512

Performance Characteristics:

● Power Derating Curve

The Operating Temperature Range: 55°C ~+155°C.

Power rating is in the case based on continuous full load at ambient temperature of 70℃. For operation at ambient temperature in excess of 70℃, the load should be derated in accordance with figure of derating Curve.

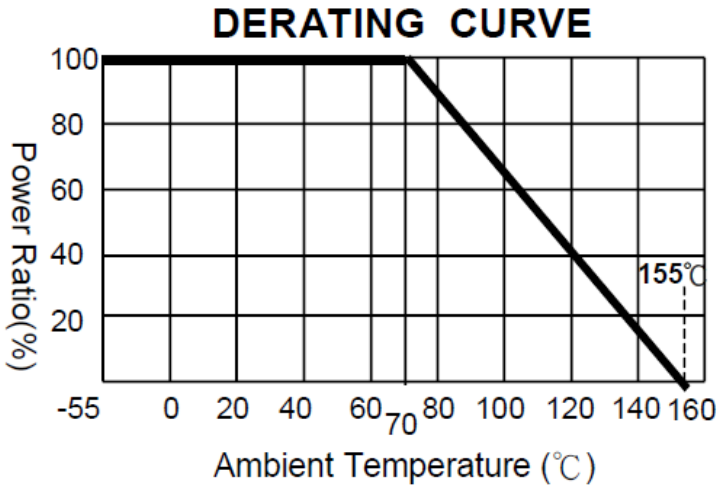

● Rated Voltage

Resistance Range: ≧1Ω

Rated Voltage: The resistor should have a DC continuous working voltage or a RMS AC continuous working voltage at commercial line frequency and wave form corresponding to the power rating, as determined formula as following:

$$V = \sqrt{P \times R}$$

V = Rated voltage (V)
P = Rated power (W)
R = Nominal resistance (Ω)

BREL International
2001 Whitfield Park Ave
Sarasota, FL 34243 USA

Phone: +1-941-758-7500
Fax: +1-941-758-7556
Mail: sales@brelintl.com
Web: www.brelintl.com

BREL International

TR-Series
Thin Film Chip Resistor
Sizes: 0201/0402/0603/0805/1206/1210/2010/2512

Reliability Tests and Requirements:

Test Item	Test Method	Procedure	Requirements
Temperature Coefficient of Resistance (T.C.R)	JIS-C-5201-1 4.8 IEC-60115-1 4.8	At 25 / -55℃ and 25℃ /+125℃, 25℃ is the reference temperature	Refer to Standard Electrical Specifications
Short Time Overload	JIS-C-5201-1 4.13 IEC-60115-1 4.13	2.5 times RCWV or Max. Overload voltage whichever is less for 5 seconds.	±(0.5%+0.05Ω) No Visual damage
Insulation Resistance	JIS-C-5201-1 4.6 IEC-60115-1 4.6	Apply 100VDC for 1 minute.	≧10GΩ
Solderability	JIS-C-5201-1 4.17 IEC-60115-1 4.17	245±5℃ for 3 seconds.	>95% Coverage No Visual damage
Resistance to Soldering Heat	JIS-C-5201-1 4.18 IEC-60115-1 4.18	260±5℃ for 10 seconds.	±(0.5%+0.05Ω) No Visual damage
Leaching	JIS-C-5201-1 4.18 IEC-60068-2-58 8.2.1	260±5℃ for 30 seconds.	>95% Coverage No Visual damage
Rapid Change of Temperature	JIS-C-5201-1 4.19 IEC-60115-1 4.19	-55℃ to +155℃, 300 cycles	±(0.5%+0.05Ω) No Visual damage
High Temperature Exposure	JIS-C5201-1 4.25 IEC 60068-2-2	At 155±5℃ for 1000 hours.	±(0.5%+0.05Ω)
Resistance to Solvent	JIS-C-5201-1 4.29	The tested resistor be immersed into isopropyl alcohol of 20~25℃ for 60 secs. Then the resistor is left in the room for 48 hrs.	±(0.5%+0.05Ω) No Visual damage
Damp Heat with Load	JIS-C-5201-1 4.24 IEC-60115-1 4.24	40±2℃, 90~95% R.H. RCWV or Max. working voltage whichever is less for 1000 hrs with 1.5 hrs "ON" and 0.5 hr "OFF"	±(0.5%+0.05Ω)
Biased Humidity	MIL-STD-202 Method 103	1,000 hours; 85°C / 85% RH, 10% of operating power. Measurement at 24±4 hours after test conclusion.	±(0.5%+0.05Ω)
Load Life (Endurance)	JIS-C-5201-1 4.25 IEC-60115-1 4.25.1	70±2℃, RCWV or Max. working voltage whichever is less for 1000 hrs with 1.5 hrs "ON" and 0.5 hr "OFF".	±(0.5%+0.05Ω)
Bending Strength	JIS-C-5201-1 4.33 IEC-60115-1 4.33	Bending once for 5 seconds D : 0201、0402、0603、0805 = 5mm 1206、1210 = 3mm 2010、2512 = 2mm	±(0.5%+0.05Ω) No Visual damage

● We can also provide AEC-Q200 test reports if required by customers.

BREL International
2001 Whitfield Park Ave
Sarasota, FL 34243 USA

Phone: +1-941-758-7500
Fax: +1-941-758-7556
Mail: sales@brelintl.com
Web: www.brelintl.com

BREL International

TR-Series
Thin Film Chip Resistor
Sizes: 0201/0402/0603/0805/1206/1210/2010/2512

Recommended Customer Soldering Parameters:

● **Wave solder Temperature Condition**

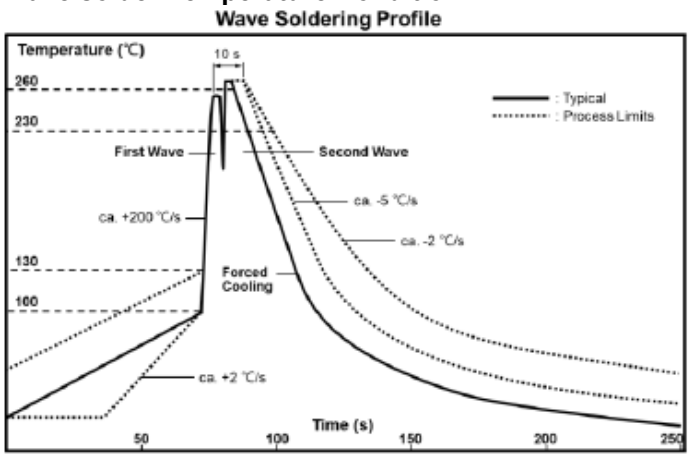

● **Solder reflow Temperature condition**

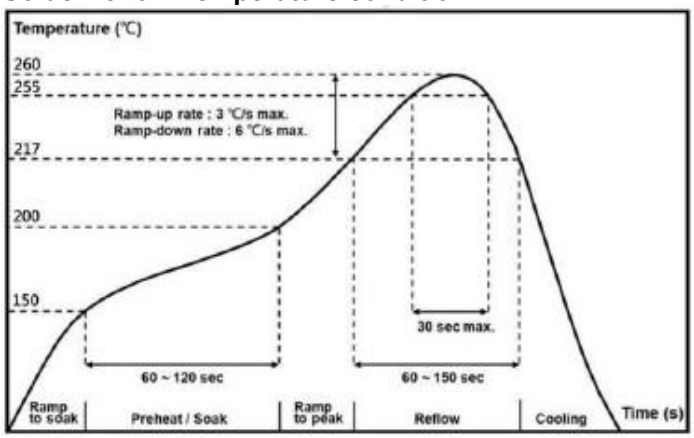

The peak temperature of soldering heat is 260 for 10s

● **Rework temperature (hot air equipment)： 350℃, 3~5seconds**

● **Recommended reflow methods**

IR, vapor phase oven, hot air oven

If reflow temperatures exceed the recommended profile, devices may not meet the performance requirements.

Recommend Land Pattern Design:

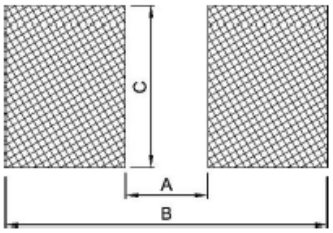

Unit: mm

Item \ Type	0201	0402	0603	0805	1206	1210	2010	2512
A	0.25	0.50	0.80	1.30	2.20	2.00	3.80	4.90
B	0.85	1.60	2.40	2.90	4.20	4.40	6.60	8.10
C	0.35	0.70	1.00	1.40	1.70	2.70	2.70	3.40

BREL International
2001 Whitfield Park Ave
Sarasota, FL 34243 USA

Phone: +1-941-758-7500
Fax: +1-941-758-7556
Mail: sales@brelintl.com
Web: www.brelintl.com

BREL International

TR-Series
Thin Film Chip Resistor
Sizes: 0201/0402/0603/0805/1206/1210/2010/2512

Packaging :

- **Reel Dimensions**

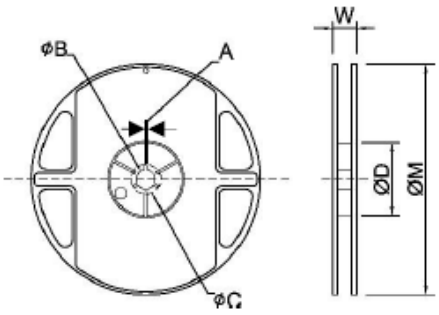

Unit: mm

Type	Size		A	ΦB	ΦC	ΦD	W	ΦM
0201	7"	10K/Reel	2.0±0.5	13.5±1.0	21±1.0	60±1.0	11.5±2.0	178±2.0
0402	7"	10K/Reel	2.0±0.5	13.5±1.0	21±1.0	60±1.0	11.5±2.0	178±2.0
0402	13"	40K/50K Reel	2.0±0.5	13.5±1.0	21±1.0	100±1.0	11.5±2.0	330±2.0
0603/0805/1206/1210	7"	5K/Reel	2.0±0.5	13.5±1.0	21±1.0	60±1.0	11.5±2.0	178±2.0
0603/0805	10"	10K/Reel	2.0±0.5	13.5±1.0	21±1.0	100±1.0	11.5±2.0	254±2.0
/1206	13"	20K/Reel	2.0±0.5	13.5±1.0	21±1.0	100±1.0	11.5±2.0	330±2.0
2010/2512	7"	4K/Reel	2.0±0.5	13.5±1.0	21±1.0	60±1.0	16.0±2.0	178±2.0

- **Paper Tape Dimensions**

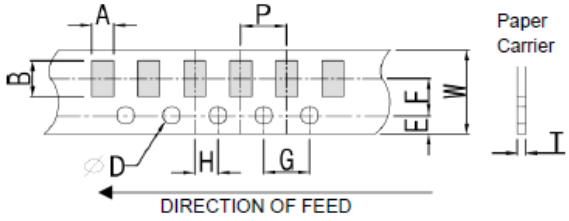

Unit : mm

Type	A	B	W	E	F	G	H	T	ΦD	P
0201	0.40±0.05	0.70±0.05	8.0±0.20	1.75±0.10	3.5±0.05	4.0±0.10	2.0±0.05	0.45±0.10	$1.50^{+0.10}_{-0}$	2.0±0.10
0402	0.70±0.10	1.20±0.10	8.0±0.20	1.75±0.10	3.5±0.05	4.0±0.10	2.0±0.05	0.45±0.10		
0603	1.05±0.20	1.80±0.20	8.0±0.20	1.75±0.10	3.5±0.05	4.0±0.10	2.0±0.05	0.60±0.10		4.0±0.10
0805	1.55±0.20	2.30±0.20	8.0±0.20	1.75±0.10	3.5±0.05	4.0±0.10	2.0±0.05	0.75±0.10		
1206	1.90±0.20	3.50±0.20	8.0±0.20	1.75±0.10	3.5±0.05	4.0±0.10	2.0±0.05	0.75±0.10		
1210	2.85±0.20	3.50±0.20	8.0±0.20	1.75±0.10	3.5±0.05	4.0±0.10	2.0±0.05	0.75±0.10		

- **Plastic Embossed Tape Dimensions**

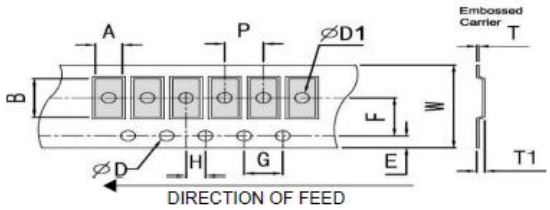

Unit : mm

Type	A	B	W	E	F	G	H	T	ΦD	ΦD1	T1	P
2010	2.80±0.20	5.60±0.20	12±0.10	1.75±0.10	5.5±0.05	4.0±0.10	2.0±0.05	0.23±0.10	$1.50^{+0.10}_{-0}$	1.50±0.10	0.85±0.15	4.0±0.10
2512	3.40±0.20	6.70±0.20	12±0.10	1.75±0.10	5.5±0.05	4.0±0.10	2.0±0.05	0.23±0.10		1.50±0.10	0.85±0.15	

Specifications subject to change without notice

Issue 12-2024

BREL International
2001 Whitfield Park Ave
Sarasota, FL 34243 USA

Phone: +1-941-758-7500
Fax: +1-941-758-7556
Mail: sales@brelintl.com
Web: www.brelintl.com

BREL International

TR-Series
Thin Film Chip Resistor

Sizes: 0201/0402/0603/0805/1206/1210/2010/2512

- **Front & Back Lead Dimensions**

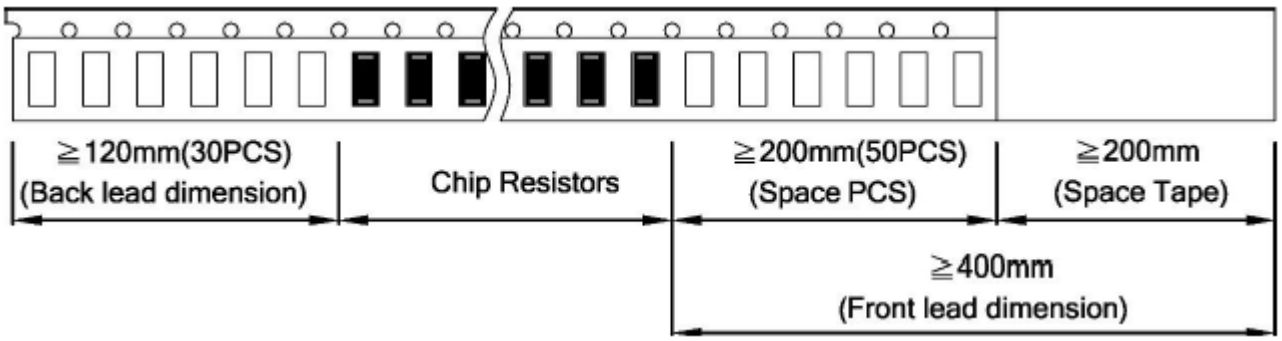

- **Top Adhesive Peel Off Strength：10~70g**

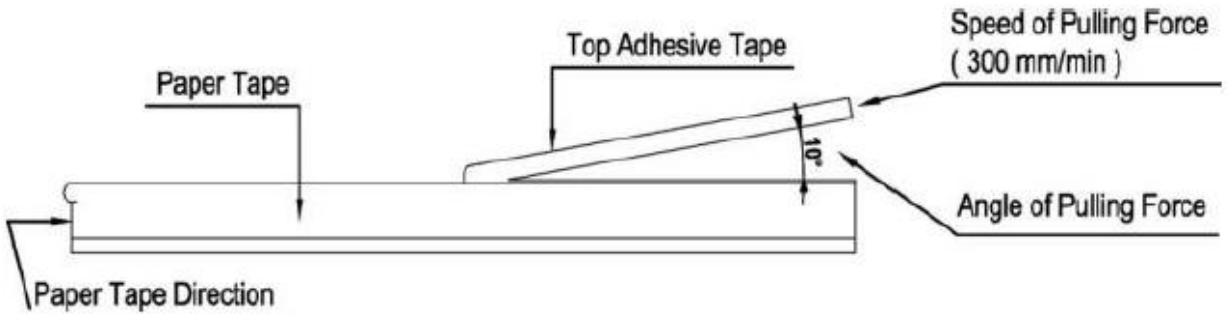

Package:

Inner Box Size	
Reel	Size H(mm)
1	13
2	24
3	36
5	60
10	113

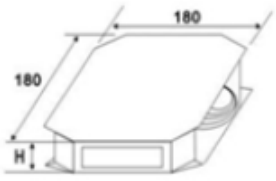

External Box Size			
Contain (Kpcs)	Length (mm)	Width (mm)	Height (mm)
25K	180	180	60
50K	180	180	110
150K	430	200	200
300K	400	400	200

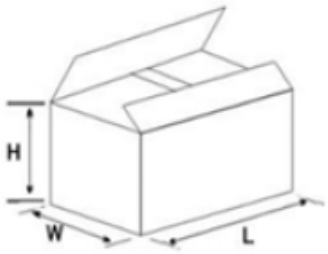

Storage Data:

Storage time at the environment temp: 25±5℃ & humidity: 60±20% is valid for two years.

BREL International
2001 Whitfield Park Ave
Sarasota, FL 34243 USA

Phone: +1-941-758-7500
Fax: +1-941-758-7556
Mail: sales@brelintl.com
Web: www.brelintl.com