BREL International

TS-Series
High Stability Thin Film Chip Resistor
Sizes: 0402/0603/0805/1206

RoHS / ELV conform 2011/65/EC 2000/53/EC

e3

Features:
- Excellent long-term stability
- Operating temperature up to 175 °C
- AEC-Q200 compliant
- Advanced sulfur resistance verified according to ASTM-B-809-95 & ANSI/EIA-977
- Halogen free and lead free
- RoHS compliant

Applications:
- Computer & relative products
- Communication devices
- Measuring instrument
- Converters
- Industrial equipment

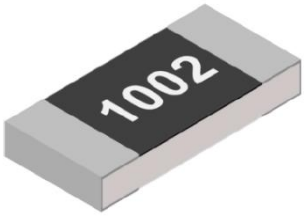

Top view

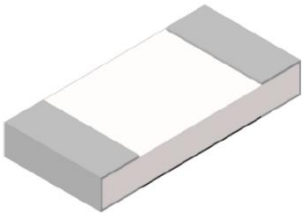

Bottom view

Part Numbering:

Example:

TS	1206	B	10K0	P	05	25	Z
Product Type	**Size (Inch)**	**Tolerance**	**Resistance**	**Package**	**Quantity (PCS)**	**TCR (ppm/°C)**	**Optional**
TS Series High Stability Thin Film Chip Resistor	0402 0603 0805 1206	A : ±0.05% B : ±0.1% C : ±0.25% D : ±0.5% F : ±1.0%	4 digits EX. 22R0 = 22 Ω 100R = 100 Ω 2K20 = 2.2 KΩ 22K0 = 22 KΩ 100K = 100 KΩ 1M00 = 1 MΩ	P : Paper Taping (0603~1206) Q : Paper Taping (0402)	05 : 5000 10 : 10000	25 : ±25 50 : ±50	Z : Standard Product

BREL International
2001 Whitfield Park Ave
Sarasota, FL 34243 USA

Phone: + 1-941-758-7500
Fax: +1-941-758-7556
Mail: sales@brelintl.com
Web: www.brelintl.com

BREL International

TS-Series
High Stability Thin Film Chip Resistor
Sizes: 0402/0603/0805/1206

Standard Electrical specifications:

Type \ Item	Rated Power at 70℃ (W)	Max Working Voltage (V)	Max Overload Voltage (V)	T.C.R. (PPM/℃)	Resistance Range (Ω)				
					A ±0.05%	B ±0.1%	C ±0.25%	D ±0.5%	F ±1.0%
TS0402	0.063	75	100	±15	49.9 ~ 12 K	10 ~ 12 K			
				±25, ±50		10 ~ 220 K			
TS0603	0.1	100	200	±15	49.9 ~ 33 K	10 ~ 33 K			
				±25, ±50		10 ~ 680 K			
TS0805	0.125	150	300	±15	49.9 ~ 51 K	10 ~ 51 K			
				±25, ±50		10 ~ 1 M			
TS1206	0.25	200	400	±15	49.9 ~ 100 K	10 ~ 100 K			
				±25, ±50		10 ~ 1.5 M			

● Operating Temperature Range: −55℃～＋155℃.

Dimensions:

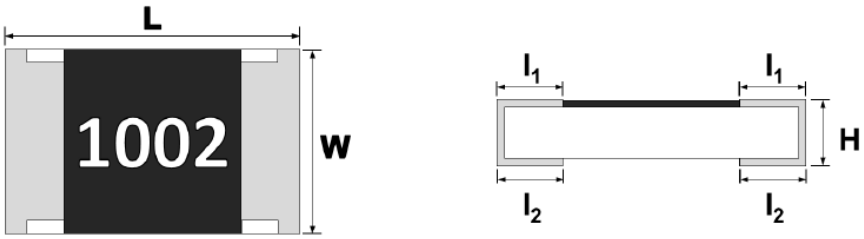

Unit: mm

Type	L	W	H	l_1	l_2
TS0402	1.00 ± 0.10	0.50 ± 0.05	0.30 ± 0.05	0.20 ± 0.10	0.20 ± 0.10
TS0603	1.60 ± 0.15	0.80 ± 0.10	0.45 ± 0.10	0.30 ± 0.20	0.30 ± 0.20
TS0805	2.00 ± 0.15	1.25 ± 0.15	0.55 ± 0.10	0.35 ± 0.20	0.40 ± 0.20
TS1206	3.10 ± 0.15	1.60 ± 0.15	0.55 ± 0.10	0.45 ± 0.20	0.50 ± 0.20

Construction:

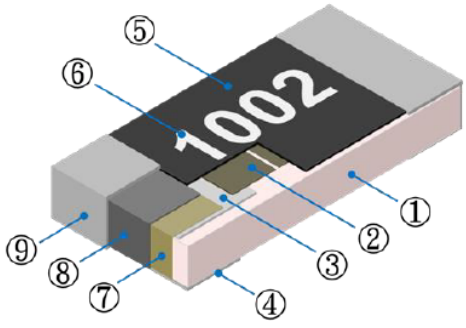

①	Alumina Substrate	④	Bottom Inner Electrode	⑦	Side Inner Electrode
②	Resistive Layer	⑤	Protective Overcoat	⑧	Nickel Barrier
③	Top Inner Electrode	⑥	Marking	⑨	Solder coating (Sn)

Specifications subject to change without notice

Issue 09-2026

BREL International
2001 Whitfield Park Ave
Sarasota, FL 34243 USA

Phone: +1-941-758-7500
Fax: +1-941-758-7556
Mail: sales@brelintl.com
Web: www.brelintl.com

BREL International

TS-Series
High Stability Thin Film Chip Resistor
Sizes: 0402/0603/0805/1206

Performance Characteristics:

● Power Derating Curve

The Operating Temperature Range: 55°C ~+155°C.
Power rating is in the case based on continuous full load at ambient temperature of 70℃ or 85℃ (turning point).
For operation at ambient temperature in excess of turning point, the load should be derated in accordance with figure of derating curve.

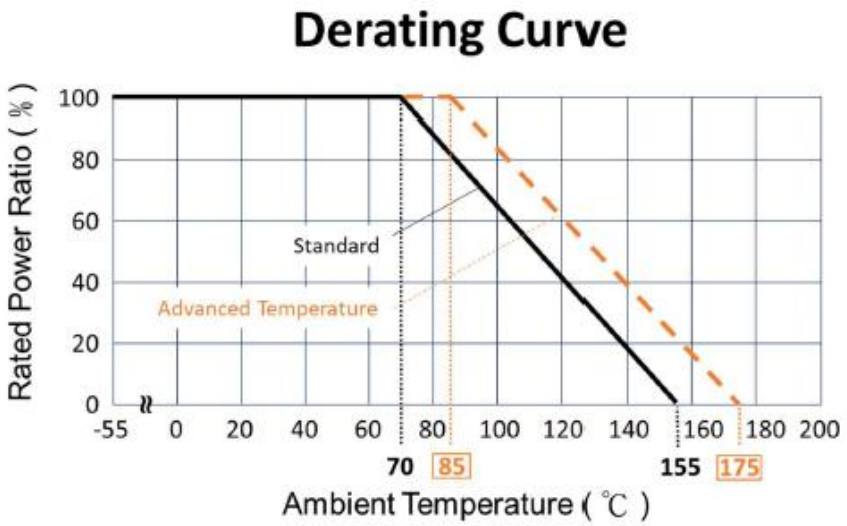

● Rated Voltage

Resistance Range: ≧1Ω
Rated Voltage: The resistor should have a DC continuous working voltage or a RMS AC continuous working voltage at commercial line frequency and wave form corresponding to the power rating, as determined formula as following:

$$V = \sqrt{P \times R}$$

V = Rated voltage (V)
P = Rated power (W)
R = Nominal resistance (Ω)

BREL International
2001 Whitfield Park Ave Sarasota,
FL 34243 USA

iphone: +1-941-758-7500
Fax: +1-941-758-7556
Mail: sales@brelintl.com
Web: www.brelintl.com

BREL International

TS-Series
High Stability Thin Film Chip Resistor
Sizes: 0402/0603/0805/1206

Reliability Tests and Requirements:

Test Item	Test Method	Procedure	Requirements
Temperature Coefficient of Resistance (T.C.R)	JIS-C-5201-1 4.8 IEC-60115-1 4.8	At 25 / -55℃ and 25℃ /+125℃, 25℃ is the reference temperature.	Refer to Standard Electrical Specifications
Short Time Overload	JIS-C-5201-1 4.13 IEC-60115-1 4.13	2.5 times RCWV or Max. Overload voltage whichever is less for 5 seconds.	±(0.1%+0.01Ω) No Visual damage
Leaching	JIS-C-5201-1 4.18 IEC-60068-2-58 8.2.1	260±5℃ for 30 seconds.	>95% Coverage No Visual damage
Resistance to Soldering Heat	MIL-STD-202 Method 210	Condition K, time above 217°C, 60s – 150s, 3 heat cycles Condition K:Infrared/Convection reflow - Simulates IRR, natural convection, and forced air convection reflow environments.	±(0.1%+0.01Ω) No Visual damage
Insulation Resistance	JIS-C-5201-1 4.6 IEC-60115-1 4.6	Apply 100VDC for 1 minute.	≧10GΩ
Temperature Cycling	JESD22 Method JA-104	1000 Cycles (-55°C to +155°C) Measurement at least 24 hours after test conclusion. Dwell Time (Soak Time):15 minutes minimum, 30 minutes minimum if component weighs above 28g.	±(0.1%+0.01Ω) No Visual damage
Resistance to Solvent	MIL-STD-202 Method 215	Add Aqueous wash chemical - OKEM Clean or equivalent.	±(0.1%+0.01Ω) No Visual damage
Humidity Bias	MIL-STD-202 Method 103	1,000 hours; 85°C / 85% RH, 10% of operating power (for components with specified operating voltages higher or equal to 500V, 10% of operating voltage). Measurement at 24±4 hours after test conclusion.	±(0.1%+0.01Ω)
High Temperature Exposure (Storage)	MIL-STD-202 Method 108	1000 hrs. @ T=155°C /175°C. Unpowered. Measurement at 24±4 hours after test conclusion.	@155℃ Standard temperature ±(0.1%+0.01Ω) @175℃ Advance temperature ±(0.3%+0.01Ω)
High Temperature Operating Life	MIL-STD-202 Method 108	1,000 hours. Power shall be applied to the component intermittently: 90 minutes ON and 30 minutes OFF. Temperature of the Chamber: maximum specified operating temperature (TA=70°C) at 100% rated power without derating. Measurement at 24±4 hours after test conclusion.	@70℃ standard temperature ±(0.1%+0.01Ω) @85℃ advance temperature ±(0.3%+0.01Ω)
External Visual	MIL-STD-883 Method 2009	Inspect device construction, marking and workmanship. Pre and Post Electrical Test not required.	No Visual damage
Mechanical Shock	MIL-STD-202 Method 213	Wave Form: Tolerance for half sine shock pulse. Peak value is 100g's. Normal duration(D) is 6(ms).	±(0.1%+0.01Ω)
Vibration	MIL-STD-202 Method 204	5 g's for 20 min., 12 cycles each of 3 orientations. Note: Test from 10-2000 H.	±(0.1%+0.01Ω)
ESD	AEC-Q200- 002 or ISO/DIS 10605	Human body model 0402 : 400 V / 0603 : 1000 V / 0805 : 1500 V / 1206 : 2000 V	±(0.5%+0.01Ω)
Solderability	J-STD-002	(1) 4 hrs 155℃ dry heat. (2) 245±5℃ 3 sec.	>95% Coverage No Visual damage
Terminal Strength (SMD)	AEC Q200-006	Pressurizing force for 60 seconds 0402 / 0603 : 8N 0805 / 1206 : 17.7N	No broken
Board Flex	AEC Q200-005	Bending once for 60 seconds 0402 / 0603 / 0805 / 1206 : 3mm	±(0.1%+0.01Ω)
Sulfur Test (FoS)	ASTM-B-809-95 ANSI/EIA-977	105±2℃, no power rating for 1000 hrs.	±(1.0%+0.01Ω)

BREL International
2001 Whitfield Park Ave
Sarasota, FL 34243 USA

Phone: +1-941-758-7500
Fax: +1-941-758-7556
Mail: sales@brelintl.com
Web: www.brelintl.com

BREL International

TS-Series
High Stability Thin Film Chip Resistor
Sizes: 0402/0603/0805/1206

Recommended Customer Soldering Parameters:

● **Wave solder Temperature Condition**

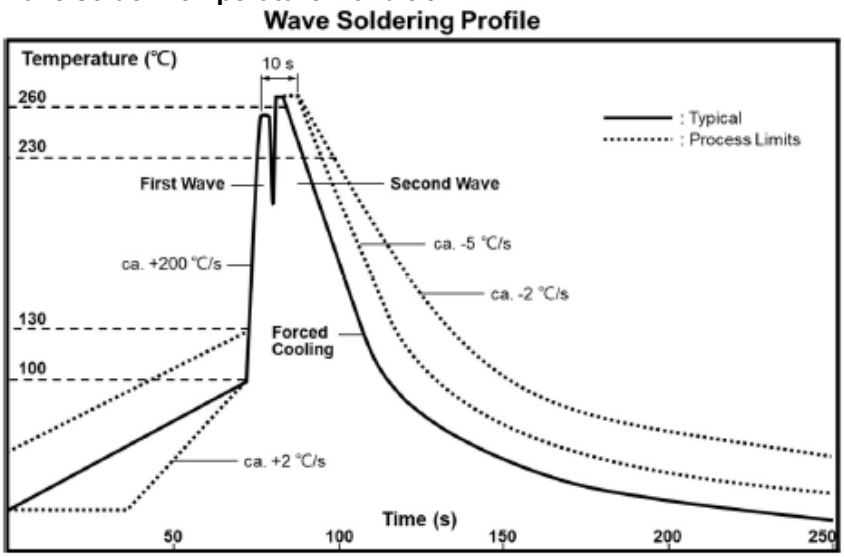

● **Solder reflow Temperature condition**

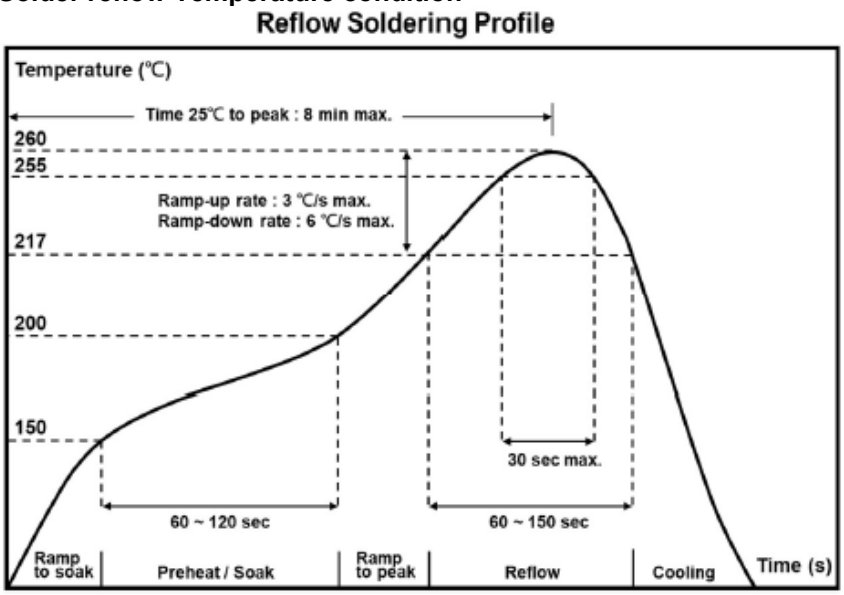

The peak temperature of soldering heat is 260℃ for 10s.

● **Rework temperature (hot air equipment)： 350℃, 3~5seconds**

● **Recommended reflow methods**

IR, vapor phase oven, hot air oven

If reflow temperatures exceed the recommended profile, devices may not meet the performance requirements.

BREL International
2001 Whitfield Park Ave
Sarasota, FL 34243 USA

Phone: +1-941-758-7500
Fax: +1-941-758-7556
Mail: sales@brelintl.com
Web: www.brelintl.com

BREL International

TS-Series
High Stability Thin Film Chip Resistor
Sizes: 0402/0603/0805/1206

Recommend Land Pattern Design:

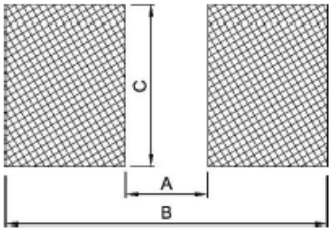

Unit: mm

Item \ Type	0402	0603	0805	1206
A	0.50	0.80	1.30	2.20
B	1.60	2.40	2.90	4.20
C	0.70	1.00	1.40	1.70

Packaging :

- **Reel Dimensions**

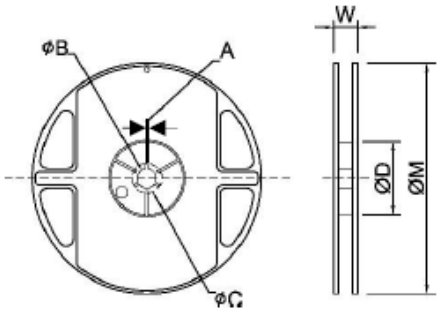

Unit: mm

Type	Size		A	φB	φC	φD	W	φM
0402	7"	10K/Reel	2.0±0.5	13.5±1.0	21±1.0	60±1.0	11.5±2.0	178±2.0
0603/0805/1206	7"	5K/Reel	2.0±0.5	13.5±1.0	21±1.0	60±1.0	11.5±2.0	178±2.0

- **Paper Tape Dimensions**

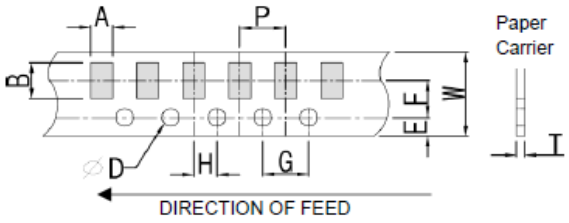

Unit : mm

Type	A	B	W	E	F	G	H	T	φD	P
0402	0.70±0.10	1.20±0.10	8.0±0.20	1.75±0.10	3.5±0.05	4.0±0.10	2.0±0.05	0.45±0.10	$1.50^{+0.10}_{-0}$	2.0±0.10
0603	1.05±0.20	1.80±0.20	8.0±0.20	1.75±0.10	3.5±0.05	4.0±0.10	2.0±0.05	0.60±0.10		4.0±0.10
0805	1.55±0.20	2.30±0.20	8.0±0.20	1.75±0.10	3.5±0.05	4.0±0.10	2.0±0.05	0.75±0.10		
1206	1.90±0.20	3.50±0.20	8.0±0.20	1.75±0.10	3.5±0.05	4.0±0.10	2.0±0.05	0.75±0.10		

BREL International
2001 Whitfield Park Ave
Sarasota, FL 34243 USA

Phone: +1-941-758-7500
Fax: +1-941-758-7556
Mail: sales@brelintl.com
Web: www.brelintl.com

BREL International

TS-Series
High Stability Thin Film Chip Resistor
Sizes: 0402/0603/0805/1206

- **Front & Back Lead Dimensions**

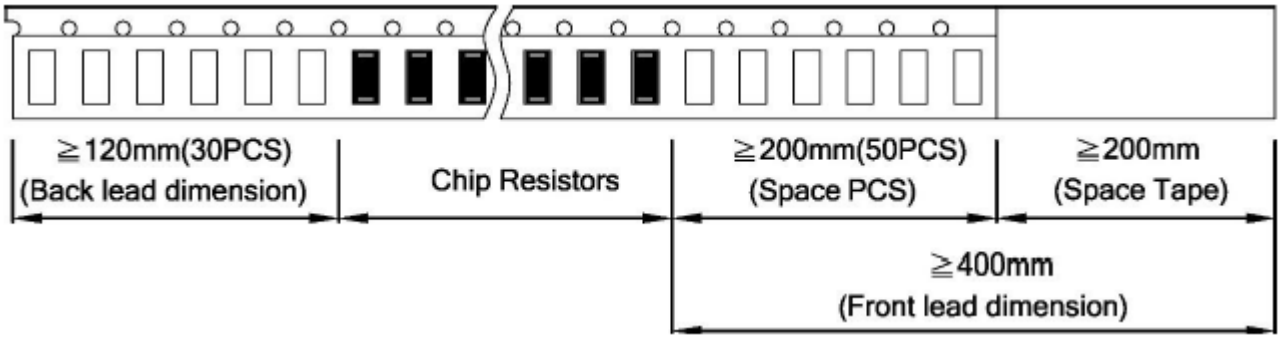

- **Top Adhesive Peel Off Strength：10~70g**

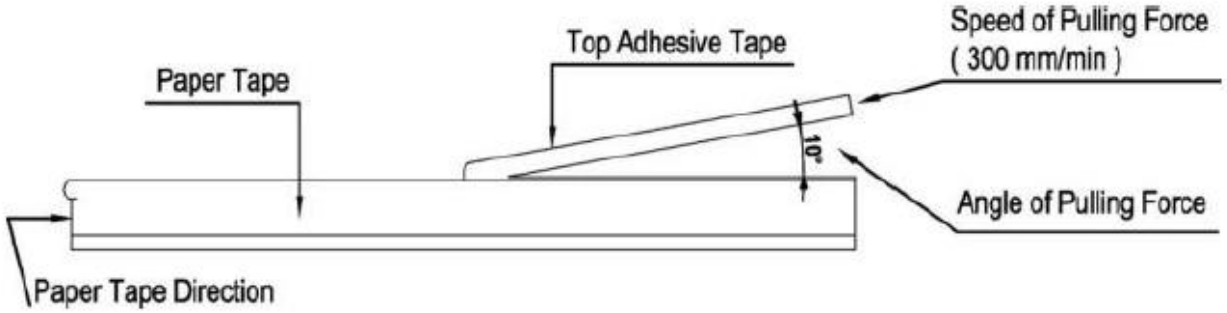

Package:

Inner Box Size	
Reel	Size H(mm)
1	13
2	24
3	36
5	60
10	113

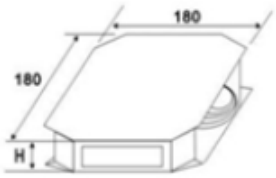

External Box Size			
Contain (Kpcs)	Length (mm)	Width (mm)	Height (mm)
25K	180	180	60
50K	180	180	110
150K	430	200	200
300K	400	400	200

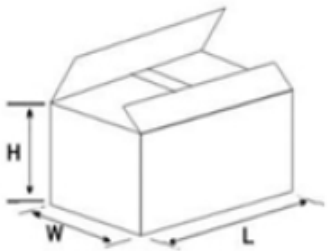

Storage Data:
Storage time at the environment temp: 25±5℃ & humidity: 60±20% is valid for two years.

BREL International
2001 Whitfield Park Ave
Sarasota, FL 34243 USA

Phone +1-941-758-7500
Fax: +1-941-758-7556
Mail: sales@brelintl.com
Web: www.brelintl.com